## Tether Strap Attachment Instructions for Ram Quad and Ram Crew Cab Trucks

| 2002-08 Ram 1500 Quad Cab Trucks<br>2002-09 Ram 2500/3500 Quad Cab Trucks<br>2007-09 Ram 3500 Quad Cab Chassis Cab Trucks<br>2008-09 Ram 4500/5500 Quad Cab Chassis Cab Trucks | 2009+ Ram 1500 Quad or Crew Cab Trucks<br>2010+ Ram 2500/3500 Crew Cab Trucks<br>2010 Ram 3500/4500/5500 Quad Cab Chassis Cab Trucks<br>2011+ Ram 3500/4500/5500 Crew Cab Chassis Cab Trucks |
|---|---|
| Multiple Child Restraint Installation Sequence (Quad Cab Rear Seats)<br>1. Obtain tether straps by raising the head restraints and reaching between the rear glass and rear seat. The tether strap may be retained with an elastic band. Accessibility to the tether strap is greatly improved by raising the seat cushion to the "up" position. Remove the elastic before use.<br>2. Place a child restraint on each outboard rear seat and adjust the tether strap so that it will reach under the head restraint to the tether anchor directly behind the seat and then to the anchor directly behind the center rear seat.<br>3. Pass each tether strap hook under the head restraint and through the loop of webbing behind the child seat.<br>4. Route each tether strap to the anchor behind the center seat, and attach the hooks to the metal ring.<br>5. Place a child restraint on the center rear seat and adjust the tether strap so that it will reach under the head restraint to the tether anchor directly behind the seat and to the anchor directly behind the right seat.<br>6. Install each child restraint and remove the slack in the tether strap according to the child restraint manufacturer's instructions. | Multiple Child Restraint Installation Sequence (Quad Cab/Crew Cab Rear Seats)<br>1. Obtain tether straps by raising the head restraints and reaching between the rear glass and rear seat. The tether strap may be retained with an elastic band. Accessibility to the tether strap is greatly improved by raising the seat cushion to the "up" position. Remove the elastic before use.<br>2. Place a child restraint on each outboard rear seat and adjust the tether strap so that it will reach under the head restraint to the tether anchor directly behind the seat and then to the anchor directly behind the center rear seat.<br>3. Pass each tether strap hook under the head restraint and through the loop of webbing behind the child seat.<br>4. Route each tether strap to the anchor behind the center seat, and attach the hooks to the anchor loop.<br>5. Place a child restraint on the center rear seat and adjust the tether strap so that it will reach under the head restraint to the tether anchor directly behind the seat and to the anchor directly behind the right seat.<br>6. Install each child restraint and remove the slack in the tether strap according to the child restraint manufacturer's instructions. |
| 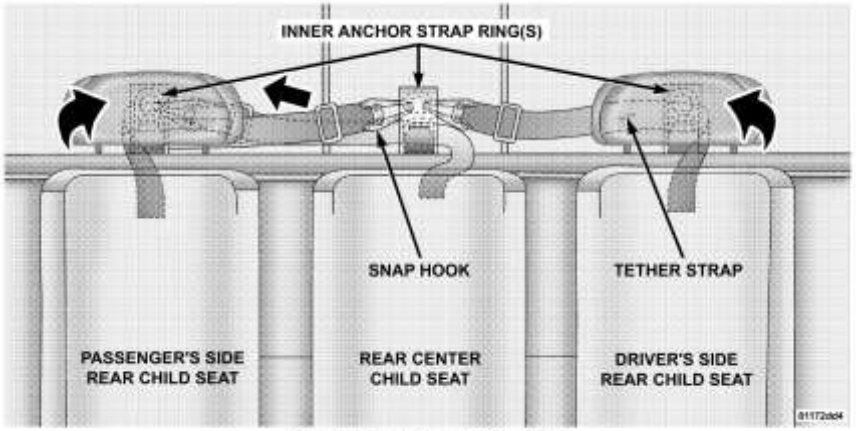 <br>Multiple Child Restraint Quad Cab | 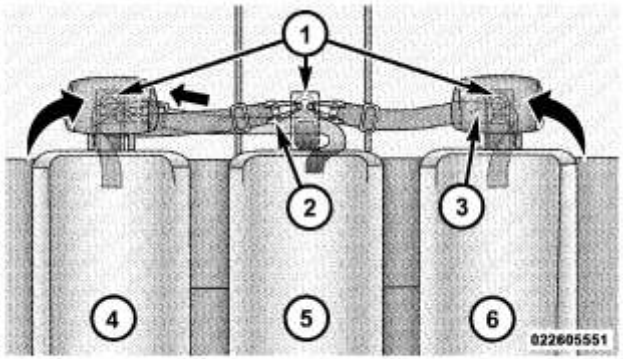 <br>Multiple Child Restraint Quad Cab®/Crew Cab<br>1 — Inner Anchor Loops<br>2 — Snap Hook<br>3 — Tether Strap<br>4 — Passenger's Side Rear Child Seat<br>5 — Rear Center Child Seat<br>6 — Driver's Side Rear Child Seat |